SCANIA DESADV D07A

The Joint Automotive Industries (JAI) Global DESADV. Based on EDIFACT Directory, D07A. – Odette International Homepage

CHANGE LOG

Date	Changed By	Version	Change
2022-12-05	Sofie Allander	1.0	First Issue
2022-12-20	Sofie Allander	1.1	SG2 NAD+SE, NAD+MF, NAD+SF DE3039 initial zeroes removed, format changed to n..10. SG17 LIN DE7140 inital zeroes removed. MEA DE6411 KGM added as unit of measure SG11 MEA DE6411 KGM added as unit of measure
2023-04-19	Sofie Allander	1.2	SG15 GIN DE7402 changed from an..20 to an..22 SG15 GIR DE7402 changed from an..20 to an..22 SG14 DTM+36 Clarification regarding the DTM segment is only to be used when batch number is given in connection to the Handling Unit and PN. SG10 CPS+++1 adjusted note text and clarified when the CPS-loop for inner packaging is to be repeated SG11 PAC DE 7233 changed from an...18 to an...17. UNB DE 0017 Date format changed from n6 to n..8. Text also updated regarding which syntax identifiers are allowed. NAD+ST address example updated BGM DE 1004 Clarification regarding the limitation of

			reusage of data in the BGM-segment. Appendix 1 adjusted, packaging scenarios added. Introduction text regarding bundling of despatch advices into the same file is added.
2023-06-09	Sofie Allander	1.3	Raise in revision, no changes.
2023-09-01	Sofie Allander	1.3.1	Appendix 1, Packing Scenario 1 and 2 revised.
2023-09-12	Sofie Allander	1.3.2	Appendix 1, Packaging Scenario 3 and 4 revised.
2024-06-19	William Ericsson	1.4	Translator modifications

INTRODUCTION OF DESPATCH ADVICE DESADV D07A

The purpose of the despatch advice message DESADV is to provide the final goods receiver with detailed information about actual contents of a consignment from the Ship From (consignor). One DESADV corresponds to one consignment. The DESADV is based on the fact that a consignment is defined as a certain quantity of goods dispatched from a certain Ship From to a certain Ship To (consignee) on the one and same occasion. One or more consignments can be loaded physically on a vehicle but one consignment must not be divided amongst several vehicles. A certain consignment is always to be kept together when carried from Ship From to Ship To.

EDI Translator

Scania EDI has, together with the Industry Standards Project, streamlined the Scania EDI Processes and with this update of the DESADV D07A, we are moving away from all other lower EDIFACT versions previously used by Scania. This means, for you as a Scania supplier utilizing EDI, that once onboarded to DESADV D07A, you are to send this version in the batch flow towards Scania. This is visualized in the specification with a specific “translator example” underneath certain segments (for example this is applied on the different supplier NAD-segments and the RFF+AJS segment). The different examples are required to make it clear that different data will be sent, depending on that the origin of the data is from different Scania ERP systems.

Please note that DESADV D08A still is valid in the sequence flow towards Scania.

The rule, that the data that Scania sends out in the DELFOR D04A is to be returned in the DESADV D07A and the INVOIC D07A is therefore crucial.

Way of Working with DESADV D07A

In practice, one consignment corresponds to one DESADV.

If the supplier wants to utilize the option of bundling several DESADVs into the same file, it is required by the Supplier to inform Scania well in advance in order for the correct setup to be done on Scania side. Each new DESADV is to be separated by a new UNH-segment, closed with UNT and the amount of DESADVs in the file is to be summarized in the last UNZ-segment.

DESADV relation to delivery note

The contents of the delivery note must correspond to the DESADV. However, the DESADV contains more detailed information than the delivery note. The Despatch Advice Note Number and the Ship From's Identification Number must be clearly stated on the delivery note and on the way-bill.

The despatch advice note number given in the BGM-segment is only allowed once and re-usage is not allowed.

Create a DESADV

The contents of a DESADV shall reflect the real contents of the consignment. Transmission of the message must not take place before the time that the consignment leaves the Ship From (supplier). The supplier is obliged to ensure that the DESADV reaches Scania well in advance of the goods arriving at Scania. At all times the supplier must be capable of submitting the DESADV within one hour of the consignment leaving the consignor. DESADV sent too late will cause the same problem at the goods reception at Scania as when a DESADV is not sent at all. Information should automatically be taken from DELFOR, instead of using hard coded information from supplier's systems. Non-significant zeros and blanks in data strings should be suppressed. However, if alphanumeric field contains leading zeros for some data and the same data occurs in EDI-messages and/or transport labels and/or on accompanying documents then the leading zeros must occur in all instances. In such a case the leading zeros are to be looked upon as being significant.

Handling Unit Identification

Scania is applying standard ISO/IEC 15459 in order to identify individual transport units when sending DESADV D07A to any of Scania's goods receptions. The standard is global and adopted by the Automotive industry. The identification is to be derived by the despatcher of the goods and shall contain a globally unique number series. More information regarding this can be found in chapter 9 in the transport label standard document STD 4172-10.

Segment / Data Element Status Description

M/R = Mandatory/Required
O = Optional
C/D = Conditional/Dependent (according to agreement)

No.	Tag	St	MaxRep	Content	Example
01	**UNA**	O	1	Service string advice	`UNA:+.? '`
02	**UNB**	M	1	Interchange header	`UNB+UNOC:4+SENDERUNB123:OD:1234+094200005560840976PU0029:OD+20220228:1339+13239'`
03	**UNH**	M	1	Message header	`UNH+7654+DESADV:D:07A:UN:GSBB11'`
04	**BGM**	M	1	Beginning of message	`BGM+351+1234567898765432'`
05	**DTM**	M	1	Document issue date and time	`DTM+137:202202280800:203'`
06	**DTM**	M	1	Goods Despatch Date/Pick Up Date	`DTM+11:20220228:102'`
07	**MEA**	M	1	Consignment gross weight, total weight of the consignment with packaging included.	`MEA+AAX+AAD+GRM:550000'`
	SG2	M	1	Buyer	
08	**NAD**	M	1	Name and address	`NAD+BY+SEBA::92'`
	SG3	M	1	RFF	
09	**RFF**	O	1	Buyer Reference	`RFF+VA:SE556084097601'`
	SG2	M	1	Ship To	
10	**NAD**	M	1	Name and address	`NAD+ST+BLC::92++SCANIA Battery LC+Verkstadsvägen by270+Södertälje++151 38+SE'`
11	**LOC**	M	1	Place of discharge	`LOC+11+RD20::92'`
	SG3	M	1	RFF	
12	**RFF**	O	1	Ship To Reference	`RFF+VA:SE556084097601'`
	SG2	M	1	Seller	
13	**NAD**	M	1	Name and address	`NAD+SE+2000000::92++NAME+STREET AND STREET NUMBER+CITY++POSTAL CODE+SE'`
	SG3	M	1	RFF	
14	**RFF**	O	1	Seller Reference	`RFF+VA:DE811123456'`
	SG2	M	1	Manufacturer	
15	**NAD**	M	1	Name and address	`NAD+MF+2000000::92++NAME+STREET AND STREET NUMBER+CITY++POSTAL CODE+SE'`
	SG3	M	1	RFF	
16	**RFF**	O	1	Manufacturer Reference	`RFF+VA:DE811123456'`
	SG2	M	1	Ship From	
17	**NAD**	M	1	Name and address	`NAD+SF+2000000::92++NAME+STREET AND STREET NUMBER+CITY++POSTAL CODE+SE'`
	SG3	M	1	RFF	
18	**RFF**	O	1	Ship From Reference	`RFF+VA:DE811123456'`

No.	Tag	St	MaxRep	Content	Example
	SG10	D	9999	Outer packaging identification	
19	**CPS**	M	1	Consignment packing sequence	`CPS+1++3'`
	SG11	M	1	Package information - Outer packaging	
20	**PAC**	M	1	Package	`PAC+1+:35+12::92'`
21	**QTY**	M	1	Quantity	`QTY+189:5:C62'`
	SG13	M	1	Package type and other package info	
22	**PCI**	M	1	Package identification	`PCI+17+++6J::5'`
	SG15	M	99	Handling Unit Number for the outer packaging- HU	
23	**GIN**	M	1	Package ID master label	`GIN+CU+6JUN98765432100000096 0'`
	SG15	M	99	List of individual packages included within the loading unit.	
24	**GIN**	M	1	Goods identity number	`GIN+AW+1JUN98765432100000096 1+1JUN987654321000000962+1JU N987654321000000963+1JUN9876 54321000000964+1JUN987654321 000000965'`
	SG10	M	9999	Inner packaging identification	
25	**CPS**	M	1	Consignment packing sequence	`CPS+2++1'`
	SG11	M	1	Package information - Inner packaging	
26	**PAC**	M	1	Package	`PAC+5+:35+B1::92'`
27	**MEA**	M	1	Inner loading container gross weight	`MEA+AAY+G+GRM:50000'`
28	**QTY**	M	1	Quantity	`QTY+52:250:C62'`
	SG13	M	1	Package identification	
29	**PCI**	M	1	Package identification	`PCI+17+++1J::5'`
	SG14	M	99	Related Identification number	
30	**GIR**	M	1	Handling unit number for the individual packages (S-label - Prefix 1J) and batch number for the goods packed	`GIR+3+1JYY987654321123456789 :CU+123456:BX'`
31	**DTM**	D	1	Date/time/period	`DTM+36:20230201:102'`
	SG15	M	99	Individual goods identity number	
32	**GIN**	D	1	Goods identity number	`GIN+BN+IdentityNumber'`
	SG17	M	1	Despatched article information	
33	**LIN**	M	1	Line item	`LIN+++2901097:IN'`
34	**PIA**	M	1	Additional Product ID or Supplier Material Number	`PIA+1+123456789'`
35	**QTY**	M	1	Despatched quantity	`QTY+12:1250:C62'`
36	**ALI**	M	1	Additional information	`ALI+SE'`
	SG18	M	1	Scheduling agreement number	
37	**RFF**	M	1	Scheduling agreement number and line item of the scheduling agreement	`RFF+AJS:123456789800001'`

No.	Tag	St	MaxRep	Content	Example
38	**UNT**	M	1	Message trailer	`UNT+36+7654'`
39	**UNZ**	M	1	Interchange trailer	`UNZ+1+13239'`

BRANCHING DIAGRAM

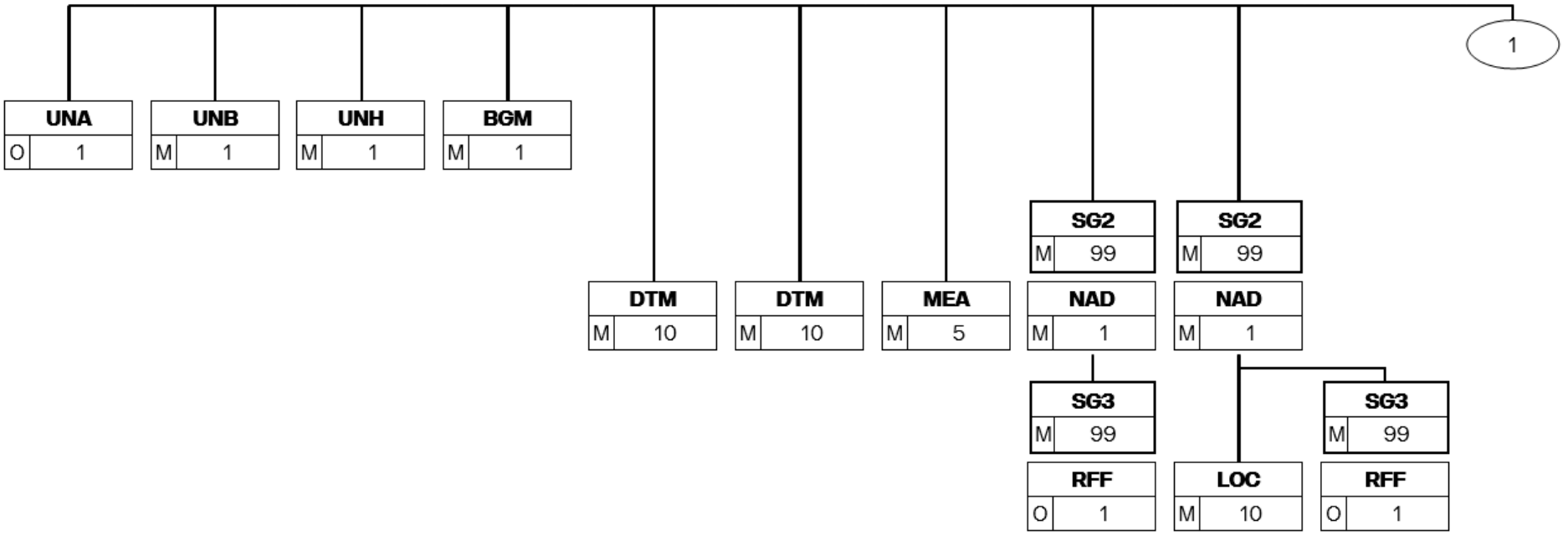

BRANCHING DIAGRAM

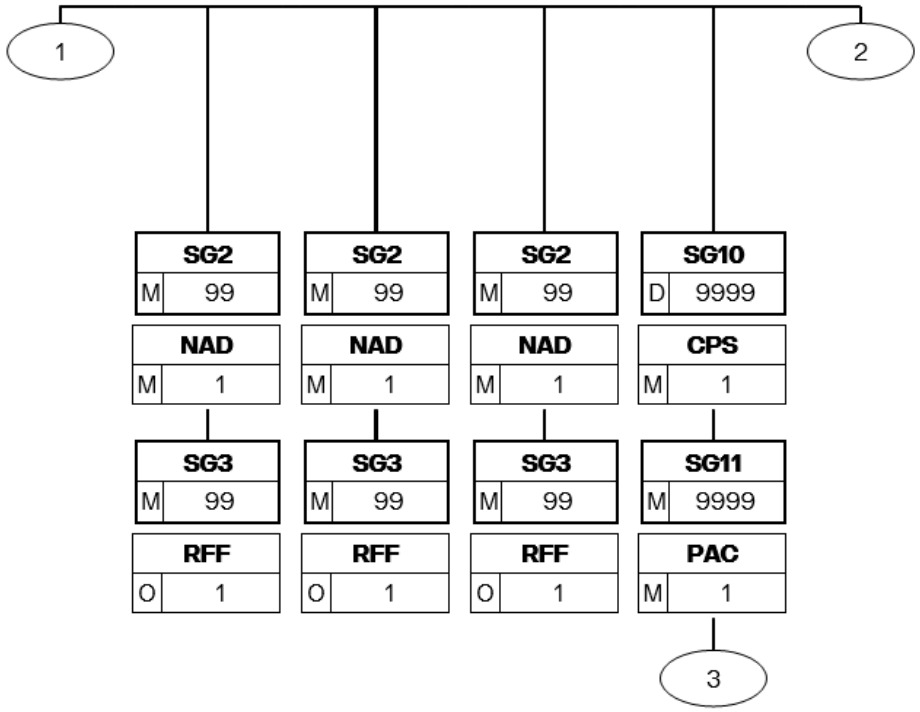

BRANCHING DIAGRAM

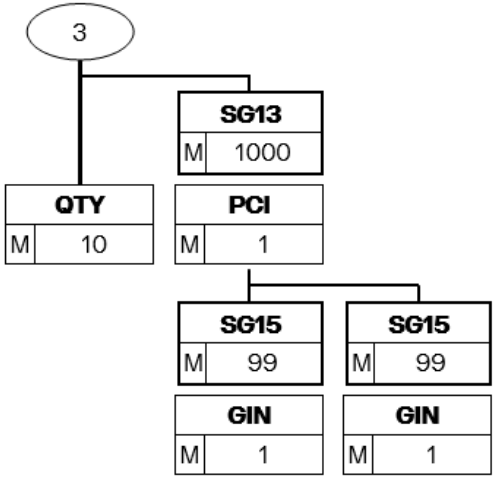

BRANCHING DIAGRAM

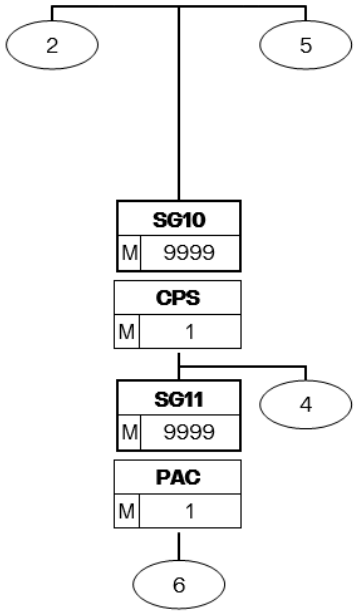

BRANCHING DIAGRAM

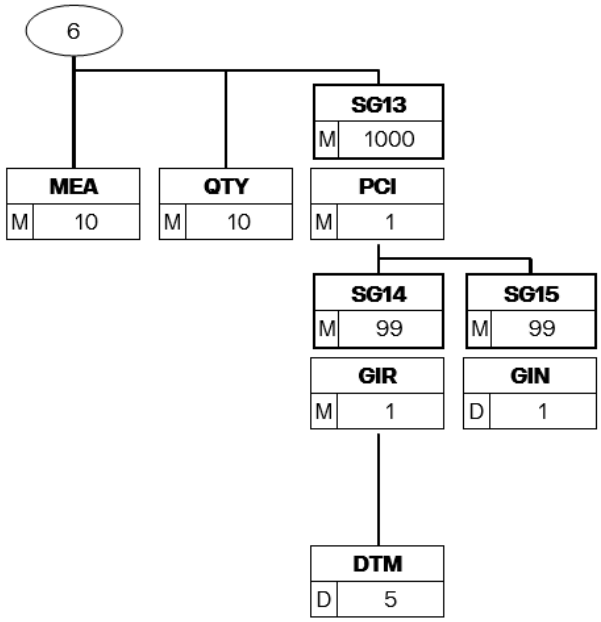

BRANCHING DIAGRAM

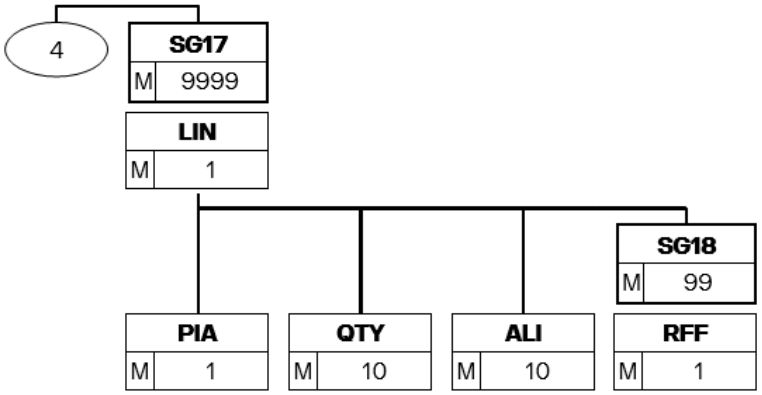

BRANCHING DIAGRAM

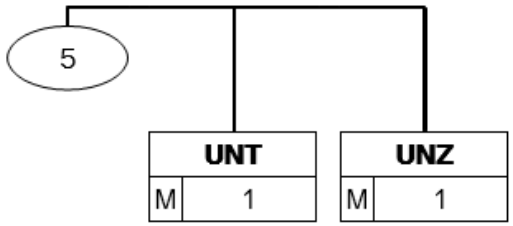

SEGMENT DETAILS

UNA

Seq. No.: 1
Status: O
MaxRep: 1

Service string advice

	Name	St	Forma	Use / Remarks	Example
UNA					**UNA**
UNA1	Component data element separator	M	an1		:
UNA2	Data element separator	M	an1		+
UNA3	Decimal mark	M	an1		.
UNA4	Release character	M	an1		?
UNA6	Segment terminator	M	an1		'

Example: `UNA:+.? '`

SEGMENT DETAILS

UNB Seq. No.: 2 Status: M MaxRep: 1 **Interchange header**

	Name	St	Forma	Use / Remarks	Example
UNB					**UNB**
S001	Syntax identifier	M			
0001	Syntax identifier	M	a4		**+UNOC**
0002	Syntax version number	M	an1	Version number :3 is also allowed	**:4**
S002	Interchange sender	M			
0004	Interchange sender identification	M	an..35	**Sender identification**	**+SENDERUNB123**
0007	Identification code qualifier	O	an..4	**Partner identification code qualifier**	**:OD**
0008	Interchange sender internal identification	O	an..35	**Routing address**	**:1234**
S003	Interchange recipient	M			
0010	Interchange recipient identification	M	an..35	**Recipient identification** A list of all Scania's UNB-addresses can be found within the EDI section on the supplier portal https://supplier.scania.com	**+09420000556084097 6PU0029**
0007	Identification code qualifier	O	an..4	**Recipient identification code qualifier**	**:OD**
S004	Date and time of preparation	M			
0017	Date	M	n..8	**Date of preparation** **Attention**: Syntax version 3 is **n6** (excluding century) & syntax version 4 is **n8** (including century)	**+20220228**
0019	Time	M	n4	**Time of preparation**	**:1339**
0020	Interchange control reference	M	an..14		**+13239'**

Note: Most commonly UNOC:3 or UNOC:4 is used, but other syntax identifiers can also be accepted.

Example 1: `UNB+UNOC:4+SENDERUNB123:OD:1234+09420000556084097 6PU0029:OD+20220228:1339+13239'`

Example 2: `UNB+UNOC:3+SENDERUNB123:OD:1234+09420000556084097 6PU0029:OD+220228:1339+13239'`

SEGMENT DETAILS

UNH Seq. No.: 3 Status: M MaxRep: 1 **Message header**

	Name	St	Forma	Use / Remarks	Example
UNH					**UNH**
0062	Message reference number	M	an..14	Message reference number	**+7654**
S009	Message identifier	M			
0065	Message type	M	an..6	**DESADV Despatch advice message**	**+DESADV**
0052	Message version number	M	an..3	**D Draft version/UN/EDIFACT Directory**	**:D**
0054	Message release number	M	an..3	**07A Release 2007 - A**	**:07A**
0051	Controlling agency, coded	M	an..3	**UN UN/CEFACT**	**:UN**
0057	Association assigned code	M	an..6	**GBSB11 SCANIA DESADV for batch deliveries V1.1 (D. 07A)**	**:GBSB11'**

Example: `UNH+7654+DESADV:D:07A:UN:GBSB11'`

SEGMENT DETAILS

BGM

Seq. No.: 4
Status: M
MaxRep: 1

Beginning of message

	Name	St	Forma	Use / Remarks	Example
BGM					**BGM**
C002	Document/message name	M			
1001	Document name code	M	an..3	Despatch advice type coded **351 Despatch advice**	**+351**
C106	Document/message identification	M			
1004	Document identifier	M	an..16	Despatch advice number A unique number per despatch advice message, allocated and administrated by the supplier. The number must be transferred to the INVOIC D07A RFF+AAK.	**+1234567898765432'**

Note: One despatch advice note number is only allowed to be used once from a supplier, reusage of despatch advice note numbers is not allowed.

Example: **BGM+351+1234567898765432'**

SEGMENT DETAILS

DTM Seq. No.: 5 Status: M MaxRep: 1 **Date/time/period**

	Name	St	Forma	Use / Remarks	Example
DTM					**DTM**
C507	Date/time/period	M			
2005	Date or time or period function code qualifier	M	an..3	**137 Document issue date time**	**+137**
2380	Date or time or period text	M	n12	Document issue date and time is syonymous with despatch advice note creation date and time	**:202202280800**
2379	Date or time or period format code	M	an..3	**203 CCYYMMDDHHMM**	**:203'**

Example: `DTM+137:202202280800:203'`

SEGMENT DETAILS

DTM Seq. No.: 6 Status: M MaxRep: 1 **Date/time/period**

	Name	St	Forma	Use / Remarks	Example
DTM					**DTM**
C507	Date/time/period	M			
2005	Date or time or period function code qualifier	M	an..3	**11 Despatch date and or time**	**+11**
2380	Date or time or period text	M	n8	Despatch date/Pick Up Date at Ship From	**:20220228**
2379	Date or time or period format code	M	an..3	**102 CCYYMMDD**	**:102'**

Example: **DTM+11:20220228:102'**

SEGMENT DETAILS

MEA Seq. No.: 7 Status: M MaxRep: 1 **Measurements**

	Name	St	Forma	Use / Remarks	Example
MEA					**MEA**
6311	Measurement purpose code qualifier	M	an..3		**+AAX**
				AAX Consignment measurement	
C502	Measurement details	M			
6313	Measured attribute code	M	an..3		**+AAD**
				AAD Consignment gross weight	
C174	Value/range	M			
6411	Measurement unit code	M	an..3		**+GRM**
				GRM gram **KGM kilogram**	
6314	Measure	M	n..15	Consignment gross weight	:550000'

Example: `MEA+AAX+AAD+GRM:550000'`

SEGMENT DETAILS

SG2 Status: M MaxRep: 1 **Buyer**

NAD Seq. No.: 8 Status: M MaxRep: 1 **Name and address**

	Name	St	Forma	Use / Remarks	Example
NAD					**NAD**
3035	Party function code qualifier	M	an..3	**BY Buyer**	**+BY**
C082	Party identification details	M			
3039	Party identifier	M	an..7	Buyer's identification number of the buying Plant. Collected from the most recent DELFOR D04A NAD+BY DE3039	**+SEBA**
1131	Code list identification code	N		not used	**:**
3055	Code list responsible agency code	M	an..3	Agency responsible for a code list **92 Assigned by buyer or buyer's agent**	**:92** **+SE'**

Note: Buyer's identification number for buyer. Collected from the most recent delivery schedule (DELFOR).

Example: `NAD+BY+SEBA::92'`

SEGMENT DETAILS

SG2 Status: M MaxRep: 1 **Buyer**

SG3 Status: M MaxRep: 1 **RFF**

RFF Seq. No.: 9 Status: O MaxRep: 1 **Reference**

	Name	St	Forma	Use / Remarks	Example
RFF					**RFF**
C506	Reference	M			
1153	Reference code qualifier	M	an..3	Please see note below **VA VAT registration number**	**+VA**
1154	Reference identifier	M	an..17	VAT, CNPJ or organization code of NAD+BY, please see note below.	**:SE556084097601'**

Note: Optional segment.
Brasilian suppliers = reference to the company's fiscal number - CNPJ.
European suppliers = reference to the VAT-code.

Example: `RFF+VA:SE556084097601'`

SEGMENT DETAILS

SG2 Status: M MaxRep: 1 — **Ship To**

NAD Seq. No.: 10 Status: M MaxRep: 1 — **Name and address**

	Name	St	Forma	Use / Remarks	Example
NAD					**NAD**
3035	Party function code qualifier	M	an..3	**ST Ship to**	**+ST**
C082	Party identification details	M			
3039	Party identifier	M	an..3	Ship To Identification Scania identification code of the Ship-To. Collected from the most recent DELFOR D04A NAD+ST DE 3039.	**+BLC**
1131	Code list identification code	N		not used	**:**
3055	Code list responsible agency code	M	an..3	Agency responsible for a code list **92 Assigned by buyer or buyer's agent**	**:92**
C058	Name and address	N		not used	
3124	Name and address description	M	an..35	N	**+**
C080	Party name	M			
3036	Party name	M	an..35	Ship To's Name	**+SCANIA BATTERY LC**
C059	Street	M			
3042	Street and number or post office box identifier	M	an..35		**+Verkstadsvägen by270**
3164	City name	M	an..35		**+Södertälje**
C819	Country subdivision details	N		not used	
3229	Country subdivision identifier	N		not used	**+**
3251	Postal identification code	M	an..17		**+151 38**
3207	Country identifier	M	an..3		**+SE'**

Note: The party to which the goods are to be shipped (consigned).

Example: `NAD+ST+BLC::92++SCANIA BATTERY LC+Verkstadsvägen by270+Södertälje++151 38+SE'`

SEGMENT DETAILS

SG2 Status: M MaxRep: 1 — **Ship To**

LOC Seq. No.: 11 Status: M MaxRep: 1 — **Place/location identification**

	Name	St	Forma	Use / Remarks	Example
LOC					LOC
3227	Location function code qualifier	M	an..3	**11 Place of discharge**	+11
C517	Location identification	M		Ship To's place of discharge..	
3225	Location identifier	M	an..25	Collected from the most recent DELFOR D04A LOC+11 DE3225	+RD20
1131	Code list identification code	N		not used	:
3055	Code list responsible agency code	M	an..3	**92 Assigned by buyer or buyer's agent**	:92'

Note: Place of discharge is the goods reception where the goods are to be unloaded on Ship To's premises by the carrier. The value shall not be a fixed value on the supplier side, it can change without prior notice. LOC+11 is to be collected from the latest DELFOR.

Example: `LOC+11+RD20::92'`

SEGMENT DETAILS

SG2 Status: M MaxRep: 1 — **Ship To**

SG3 Status: M MaxRep: 1 — **RFF**

RFF Seq. No.: 12 Status: O MaxRep: 1 — **Reference**

	Name	St	Forma	Use / Remarks	Example
RFF					**RFF**
C506	Reference	M			
1153	Reference code qualifier	M	an..3	Please see note below **VA VAT registration number**	**+VA**
1154	Reference identifier	M	an..17	VAT, CNPJ or organization code of NAD+ST, please see note below.	**:SE556084097601'**

Note: Optional segment.
Brasilian suppliers = reference to the company's fiscal number - CNPJ.
European suppliers = reference to the VAT-code.

Example: `RFF+VA:SE556084097601'`

SEGMENT DETAILS

SG2 Status: M MaxRep: 1 — **Seller**

NAD Seq. No.: 13 Status: M MaxRep: 1 — **Name and address**

	Name	St	Forma	Use / Remarks	Example
NAD					**NAD**
3035	Party function code qualifier	M	an..3	**SE Seller**	**+SE**
C082	Party identification details	M			
3039	Party identifier	M	n..10	Seller Identification number. Collected from the most recent DELFOR D04A NAD+SE DE3039	**+2000000**
1131	Code list identification code	N		not used	**:**
3055	Code list responsible agency code	M	an..3	Agency responsible for a code list **92 Assigned by buyer or buyer's agent**	**:92**
C058	Name and address	N		not used	
3124	Name and address description	N		not used	**+**
C080	Party name	M			
3036	Party name	M	an..35		**+NAME**
C059	Street	M			
3042	Street and number or post office box identifier	M	an..35		**+STREET AND STREET NUMBER**
3164	City name	M	an..35		**+CITY**
C819	Country subdivision details	N		not used	
3229	Country subdivision identifier	N		not used	**+**
3251	Postal identification code	M	an..17		**+POSTAL CODE**
3207	Country identifier	M	an..3	ISO 3166-1 - Alpha 2 Code	**+SE'**

Example: `NAD+SE+2000000::92++NAME+STREET AND STREET NUMBER+CITY++POSTAL CODE+SE'`

EDI Translator Example: `NAD+SE+1234::92++NAME+STREET AND STREET NUMBER+CITY++POSTAL CODE+SE'`
Note: Using Scanias EDI translator, the NAD+SE segment will only contain the Supplier Seller ID in C082 DE3039 (party identifier).

SEGMENT DETAILS

SG2 Status: M MaxRep: 1 **Seller**

SG3 Status: M MaxRep: 1 **RFF**

RFF Seq. No.: 14 Status: O MaxRep: 1 **Reference**

	Name	St	Forma	Use / Remarks	Example
RFF					**RFF**
C506	Reference	M			
1153	Reference code qualifier	M	an..3	Please see note below **VA VAT registration number**	**+VA**
1154	Reference identifier	M	an..17	VAT, CNPJ or organization code	**:DE811123456'**

Note: Optional segment.
Brasilian suppliers = reference to the company's fiscal number - CNPJ.
European suppliers = reference to the VAT-code.

Example: `RFF+VA:DE811123456'`

SEGMENT DETAILS

SG2 Status: M MaxRep: 1 — **Manufacturer**

NAD Seq. No.: 15 Status: M MaxRep: 1 — **Name and address**

	Name	St	Forma	Use / Remarks	Example
NAD					**NAD**
3035	Party function code qualifier	M	an..3	**MF Manufacturer of goods**	**+MF**
C082	Party identification details	M			
3039	Party identifier	M	n..10	Manufacturer's Identification number The manufacturer number allocated by Scania for the supplier manufacturing the goods. Collected from the most recent DELFOR D04A NAD+MF DE3039.	**+2000000**
1131	Code list identification code	N		not used	**:**
3055	Code list responsible agency code	M	an..3	Agency responsible for a code list **92 Assigned by buyer or buyer's agent**	**:92**
C058	Name and address	N		not used	
3124	Name and address description	N		not used	**+**
C080	Party name	M			
3036	Party name	M	an..35		**+NAME**
C059	Street	M			
3042	Street and number or post office box identifier	M	an..35		**+STREET AND STREET NUMBER**
3164	City name	M	an..35		**+CITY**
C819	Country subdivision details	N		not used	
3229	Country subdivision identifier	N		not used	**+**
3251	Postal identification code	M	an..17		**+POSTAL CODE**
3207	Country identifier	M	an..3	ISO 3166-1 - Alpha 2 Code	**+SE'**

Example: `NAD+MF+2000000::92++NAME+STREET AND STREET NUMBER+CITY++POSTAL CODE+SE'`

Example: `NAD+MF+1234::92++NAME+STREET AND STREET NUMBER+CITY++POSTAL CODE+SE'`

Note: Using Scanias EDI translator, the NAD+MF segment will only contain the 4-digit Supplier ID in C082 DE3039 (party identifier).

SEGMENT DETAILS

SG2 Status: M MaxRep: 1 **Manufacturer**

SG3 Status: M MaxRep: 1 **RFF**

RFF Seq. No.: 16 Status: O MaxRep: 1 **Reference**

	Name	St	Forma	Use / Remarks	Example
RFF					**RFF**
C506	Reference	M			
1153	Reference code qualifier	M	an..3	**VA VAT registration number**	**+VA**
1154	Reference identifier	M	an..17	VAT, CNPJ or organization code of the NAD+MF, please see note below	**:DE811123456'**

Note: Optional segment.
Brasilian suppliers = reference to the company's fiscal number - CNPJ.
European suppliers = reference to the VAT-code.

Example: `RFF+VA:DE811123456'`

SEGMENT DETAILS

SG2 Status: M MaxRep: 1 — **Ship From**

NAD Seq. No.: 17 Status: M MaxRep: 1 — **Name and address**

	Name	St	Forma	Use / Remarks	Example
NAD					NAD
3035	Party function code qualifier	M	an..3	**SF Ship from**	+SF
C082	Party identification details	M			
3039	Party identifier	M	n..10	Ship From's Identification number. The supplier number allocated by Scania for the supplier sending the Goods. Collected from the most recent DELFOR D04A NAD+SF DE3039.	+2000000
1131	Code list identification code	N		not used	:
3055	Code list responsible agency code	M	an..3	Agency responsible for a code list **92 Assigned by buyer or buyer's agent**	:92
C058	Name and address	N		not used	
3124	Name and address description	N		not used	+
C080	Party name	M			
3036	Party name	M	an..35		+NAME
C059	Street	M			
3042	Street and number or post office box identifier	M	an..35		+STREET AND STREET NUMBER
3164	City name	M	an..35		+CITY
C819	Country subdivision details	N		not used	
3229	Country subdivision identifier	N		not used	+
3251	Postal identification code	M	an..17		+POSTAL CODE
3207	Country identifier	M	an2	ISO 3166-1 - Alpha 2 Code	+SE'

Example: `NAD+SF+2000000::92++NAME+STREET AND STREET NUMBER+CITY++POSTAL CODE+SE'`

EDI Translator Example: `NAD+SF+1234::92++NAME+STREET AND STREET NUMBER+CITY++POSTAL CODE+SE'`
Note: The data within the Scanias EDI translator, the segment; NAD+SF will only contain the 4-digit Supplier ID in C082 DE3039 (Party Identifier).

SEGMENT DETAILS

SG2 Status: M MaxRep: 1 **Ship From**

SG3 Status: M MaxRep: 1 **RFF**

RFF Seq. No.: 18 Status: O MaxRep: 1 **Reference**

	Name	St	Forma	Use / Remarks	Example
RFF					**RFF**
C506	Reference	M			
1153	Reference code qualifier	M	an..3	**VA VAT registration number**	**+VA**
1154	Reference identifier	M	an..17	VAT, CNPJ or organization code of NAD+SF, please see note below.	**:DE811123456'**

Note: Optional segment.
Brasilian suppliers = reference to the company's fiscal number - CNPJ.
European suppliers = reference to the VAT-code.

Example: `RFF+VA:DE811123456'`

SEGMENT DETAILS

SG10 Status: D MaxRep: 9999 — **Outer packaging identification**

CPS Seq. No.: 19 Status: M MaxRep: 1 — **Consignment packing sequence**

	Name	St	Forma	Use / Remarks	Example
CPS					CPS
7164	Hierarchical structure level identifier	M	an..35	Line number Ascending counter assigned by the message sender to a packaging material group within the message. It is recommended to start with 1 and continue in an ascending order if several CPS loops are added.	+1
7166	Hierarchical structure parent identifier	N		not used	+
7075	Packaging level code	M	an..3	Outer handling units, highest packaging level **3 Outer**	+3'

Note: The CPS segment identifies the highest hierarchy of the packaging.
Each handling unit is to have an outer and inner packaging sequence, exception is for simplified loading units where the inner packaging sequence is sufficient.

Example: `CPS+1++3'`

SEGMENT DETAILS

SG10 Status: D MaxRep: 9999 — **Outer packaging identification**

SG11 Status: M MaxRep: 1 — **Package information - Outer packaging**

PAC Seq. No.: 20 Status: M MaxRep: 1 — **Package**

	Name	St	Forma	Use / Remarks	Example
PAC					PAC
7224	Package quantity	M	n..8	Number of handling units (normally pallets) within the outer packaging sequence.	+1
C531	Packaging details	O			
7075	Packaging level code	N		not used	+
7233	Packaging related description code	M	an..3	**35 Type of package**	:35
C202	Package type	O			
7065	Package type description code	M	an..17	Scania's identification number for the outer packaging type. .	+12
1131	Code list identification code	N		not used	:
3055	Code list responsible agency code	M	an..3	**92 Assigned by buyer or buyer's agent**	:92'

Note: Information regarding the outer packaging type

Example: `PAC+1+:35+12::92'`

SEGMENT DETAILS

SG10 Status: D MaxRep: 9999 — **Outer packaging identification**

SG11 Status: M MaxRep: 1 — **Package information - Outer packaging**

QTY Seq. No.: 21 Status: M MaxRep: 1 — **Quantity**

	Name	St	Forma	Use / Remarks	Example
QTY					**QTY**
C186	Quantity details	M			
6063	Quantity type code qualifier	M	an..3	**189 Number of packages in handling unit**	**+189**
6060	Quantity	M	an..35	Number of packages within the handling unit	**:5**
6411	Measurement unit code	M	an..8	C62= One = PCE **C62 one** **PCE Pieces**	**:PCE'**

Note: Number of packages within each handling unit, only packages within the next hierarchy level is counted (inner). Required for handling units with master or mixed label.

Example: If a shipment contains 2 pallets, then the number of inner packages on one individual pallet is to be given within this segment. If there are different amounts of inner packages on the separate pallets, then the CPS-loop needs to be restarted.

Example: `QTY+189:5:PCE'`

SEGMENT DETAILS

SG10 Status: D MaxRep: 9999 — **Outer packaging identification**

SG11 Status: M MaxRep: 1 — **Package information - Outer packaging**

SG13 Status: M MaxRep: 1 — **Package type and other package info**

PCI Seq. No.: 22 Status: M MaxRep: 1 — **Package identification**

	Name	St	Forma	Use / Remarks	Example
PCI					PCI
4233	Marking instructions code	M	an..3	**17 Seller's instructions**	+17
C210	Marks & labels	N		not used	
7102	Shipping marks description	N		not used	+
8169	Full or empty indicator code	N		not used	+
C827	Type of marking	M		5J = unique license plate number assigned to a mixed load 6J = unique license plate number assigned to a master load The data indentifier makes up for the first part of the package ID and distinguish if it is an inner or outer packaging. For the outer packaging it is required to state if it is a master load or mixed load.	
7511	Marking type code	M	an2	Handling Unit Category To be Re-used as bar-code prefix (data identifier) for the serial number on the Transport Label. **5J Mixed loading unit with different part numbers (Mixed master label- G)** **6J Homogeneous loading unit containing identical part numbers (Master label for homogeneous loading unit-M)**	+6J
1131	Code list identification code	N		not used	:
3055	Code list responsible agency code	M	an..3	**5 ISO (International Organization for**	:5'

Seq. No. = Segment number in the guide, MaxRep = Maximum repetitions of the segments and segment groups
St = Status: M/R=Mandatory/Required, O=Optional, C/D=Conditional/Depending, N=Not used

SEGMENT DETAILS

	Name	St	Forma	Use / Remarks	Example
				Standardization)	

Note: Each PCI segment (SG13) represents exactly one handling unit. If there are several handling units grouped together, new PCI-segments (SG13) needs to be repeated for each handling unit.

Example: `PCI+17+++6J::5'`

SEGMENT DETAILS

SG10 Status: D MaxRep: 9999 — **Outer packaging identification**

SG11 Status: M MaxRep: 1 — **Package information - Outer packaging**

SG13 Status: M MaxRep: 1 — **Package type and other package info**

SG15 Status: M MaxRep: 99 — **Handling Unit Number for the outer packaging- HU**

GIN Seq. No.: 23 Status: M MaxRep: 1 — **Goods identity number**

	Name	St	Forma	Use / Remarks	Example
GIN					GIN
7405	Object identification code qualifier	M	an..3	ML is only to be used after agreement with Scania (non unique packaging ID). CU is used when the number series is a globally unique identifier. **ML Marking/label number** **CU GS1 Global Individual Asset Identifier**	+CU
C208	Identity number range	M			
7402	Object identifier	M	an..22	**License plate** Individual number for the handling unit. License plate is not to be repeated within atleast one year and shall be a globally unique numbering system.	+6JUN98765432100000960'

Note: The handling unit number (license plate) must be a globally unique number series assigned by the supplier. The serial number shall correspond to the serial number on the Transport Label. More information regarding the structure of a Handling Unit number can be found in STD 4172-10 chapter 9.

Example: `GIN+CU+6JUN987654321000000960'`

SEGMENT DETAILS

SG10 Status: D MaxRep: 9999 — **Outer packaging identification**

SG11 Status: M MaxRep: 1 — **Package information - Outer packaging**

SG13 Status: M MaxRep: 1 — **Package type and other package info**

SG15 Status: M MaxRep: 99 — **List of individual packages included within the loading unit.**

The list of the packages included within the identified loading unit, 99 individual packages can be added to the list.

GIN Seq. No.: 24 Status: M MaxRep: 1 — **Goods identity number**

	Name	St	Forma	Use / Remarks	Example
GIN					**GIN**
7405	Object identification code qualifier	M	an..3	Note: Serial numbers of the packages included in the identified loading unit **AW Serial shipping container code**	**+AW**
C208	Identity number range	M			
7402	Object identifier	M	an..22	**License plate package 1** Individual number for packages included in the inner handling unit. License plate number is not to be repeated within atleast one year and shall be a globally unique numbering system	**+1JUN98765432100000961**
C208	Identity number range	D			
7402	Object identifier	M	an..22	**License plate package 2** Individual number for packages included in the inner handling unit. License plate number is not to be repeated within atleast one year and shall be a globally unique numbering system	**+1JUN98765432100000962**
C208	Identity number range	D			
7402	Object identifier	M	an..22	**License plate package 3** Individual number for packages included in the inner handling unit. License plate number is not to be repeated within atleast one year and shall be a globally unique numbering	**+1JUN98765432100000963**

SEGMENT DETAILS

	Name	St	Forma	Use / Remarks	Example
				system	
C208	Identity number range	D			
7402	Object identifier	M	an..22	**License plate package 4** Individual number for packages included in the inner handling unit. License plate number is not to be repeated within atleast one year and shall be a globally unique numbering system	**+1JUN98765432100000 0964**
C208	Identity number range	D			
7402	Object identifier	M	an..22	**License plate package 5** Individual number for packages included in the inner handling unit. License plate number is not to be repeated within atleast one year and shall be a globally unique numbering system	**+1JUN98765432100000 0965'**

Note: The list of the packages included within the identified loading unit, 99 individual packages can be added to the list.

Example: `GIN+AW+1JUN987654321000000961+1JUN987654321000000962+1JUN987654321000000963+1JUN987654321000000964+1JUN987654321000000965'`

SEGMENT DETAILS

SG10 Status: M MaxRep: 9999 **Inner packaging identification**

Packages included within 5J or 6J outer packaging sequence or a simplified loading unit.

CPS Seq. No.: 25 Status: M MaxRep: 1 **Consignment packing sequence**

	Name	St	Forma	Use / Remarks	Example
CPS					**CPS**
7164	Hierarchical structure level identifier	M	an..35	Line number Ascending counter assigned by the message sender to a packaging material group within the message. It is recommended to start with 1 and continue in an ascending order if several CPS loops are added.	**+2**
7166	Hierarchical structure parent identifier	N		not used	**+**
7075	Packaging level code	M	an..3	**1 Inner**	**+1'**

Note: The CPS segment has to be repeated for each article number in LIN segment. A CPS loop can only contain one batch number. If the same article is delivered with different batch numbers, expiration date, manufacturing date, amounts (amount of packages or parts in the inner handling unit) the whole loop starting with CPS has to be repeated.

Example: `CPS+2++1'`

SEGMENT DETAILS

SG10 Status: M MaxRep: 9999 **Inner packaging identification**

Packages included within 5J or 6J outer packaging sequence or a simplified loading unit.

SG11 Status: M MaxRep: 1 **Package information - Inner packaging**

PAC Seq. No.: 26 Status: M MaxRep: 1 **Package**

	Name	St	Forma	Use / Remarks	Example
PAC					PAC
7224	Package quantity	M	n..8	Number of Identical Packages. This value should correspond to the amount of packages contained in the SG15 GIR+AW within the outer packaging sequence and SG14 GIR+3 segment within the inner packaging sequence.	+5
C531	Packaging details	O		not used	
7075	Packaging level code	N		not used	+
7233	Packaging related description code	M	an..3	**35 Type of package**	:35
7073	Packaging terms and conditions code	N		not used	:
C202	Package type	O			
7065	Package type description code	M	an..17	Scania's identification number for the package type.	+B1
1131	Code list identification code	N		not used	:
3055	Code list responsible agency code	M	an..3	**92 Assigned by buyer or buyer's agent**	:92'

Note: The segment corresponds to the total number of packages of the same type given in data elements SG11 PAC+ DE 7224. Each package should contain the same amount of articles as given in SG11 QTY+52 DE 6060.

Example: `PAC+5+:35+B1::92'`

SEGMENT DETAILS

SG10 Status: M MaxRep: 9999 **Inner packaging identification**

Packages included within 5J or 6J outer packaging sequence or a simplified loading unit.

SG11 Status: M MaxRep: 1 **Package information - Inner packaging**

MEA Seq. No.: 27 Status: M MaxRep: 1 **Measurements**

	Name	St	Forma	Use / Remarks	Example
MEA					**MEA**
6311	Measurement purpose code qualifier	M	an..3		**+AAY**
				AAY Package measurement	
C502	Measurement details	M			
6313	Measured attribute code	M	an..3		**+G**
				G Gross weight	
C174	Value/range	M			
6411	Measurement unit code	M	an..3		**+GRM**
				GRM gram **KGM kilogram**	
6314	Measure	M	n..15		**:50000'**

Example: **MEA+AAY+G+GRM:50000'**

SEGMENT DETAILS

SG10 Status: M MaxRep: 9999 — **Inner packaging identification**

Packages included within 5J or 6J outer packaging sequence or a simplified loading unit.

SG11 Status: M MaxRep: 1 — **Package information - Inner packaging**

QTY Seq. No.: 28 Status: M MaxRep: 1 — **Quantity**

	Name	St	Forma	Use / Remarks	Example
QTY					QTY
C186	Quantity details	M			
6063	Quantity type code qualifier	M	an..3	**52 Quantity per pack**	+52
6060	Quantity	M	an..15	Total quantity of articles in one package.	:250
6411	Measurement unit code	M	an..3	C62 - One = PCS **C62 one** **PCE Pieces**	:C62'

Example: `QTY+52:250:C62'`

SEGMENT DETAILS

SG10 Status: M MaxRep: 9999 **Inner packaging identification**

Packages included within 5J or 6J outer packaging sequence or a simplified loading unit.

SG11 Status: M MaxRep: 1 **Package information - Inner packaging**

SG13 Status: M MaxRep: 1 **Package identification**

PCI Seq. No.: 29 Status: M MaxRep: 1 **Package identification**

	Name	St	Forma	Use / Remarks	Example
PCI					PCI
4233	Marking instructions code	M	an..3	**17 Seller's instructions**	+17
C210	Marks & labels	N		not used	
7102	Shipping marks description	N		not used	+
8169	Full or empty indicator code	N		not used	+
C827	Type of marking	M			
7511	Marking type code	M	an2	Handling Unit Category To be Re-used as bar-code prefix (data identifier) for the serial number on the Transport Label. **1J Unique package ID simplified loading unit (single label - S)**	+1J
1131	Code list identification code	N		not used	:
3055	Code list responsible agency code	M	an..3	**5 ISO (International Organization for Standardization)**	:5'

Note: 1J = Unique package ID simplified loading unit (single label - S)

Example: `PCI+17+++1J::5'`

SEGMENT DETAILS

SG10 Status: M MaxRep: 9999 **Inner packaging identification**

Packages included within 5J or 6J outer packaging sequence or a simplified loading unit.

SG11 Status: M MaxRep: 1 **Package information - Inner packaging**

SG13 Status: M MaxRep: 1 **Package identification**

SG14 Status: M MaxRep: 99 **Related Identification number**

Note: Serial number for the individual packages. The field must be repeated as many times as there are packages.

GIR Seq. No.: 30 Status: M MaxRep: 1 **Related identification numbers**

	Name	St	Forma	Use / Remarks	Example
GIR					GIR
7297	Set type code qualifier	M	an..3	**3 Package**	+3
C206	Identification number	M			
7402	Object identifier	M	an..22	**License plate** ID of the individual packages within the shipment. The field must be repeated as many times as there are packages. The number shall be a globally unique number assigned by the supplier. The license plate shall not be repeated within one year.	+1JYY98765432112345 6789
7405	Object identification code qualifier	D	an2	ML is only to be used after agreement with Scania (non unique packaging ID). CU is used when the number series is a globally unique identifier. **ML Marking/label number** **CU GS1 Global Individual Asset Identifier**	:CU
C206	Identification number	D			
7402	Object identifier	M	an..15	**Batch Number** Used if there is a batch requirement on the article sent, used after agreement with Scania.	+123456

SEGMENT DETAILS

7405	Object identification code qualifier	M an2	**BX Batch number**	**:BX'**

Note: Handling unit number for individual packages are always to be given and shall be a globally unique number series assigned by the supplier, if no other agreement has been done between the supplier and Scania. The handling unit number shall be stated on the serial number field on the Transport Label.

Batch number is to be used if the article is a documentation article or has a cast number requirement. If the same article is delivered with different batch numbers, the whole loop starting with CPS has to be repeated. The batch number is, if used, to be stated within the assigned field on the transport label. More information regarding handling unit structure is to be found in STD 4172-10 chapter 9.

Example: `GIR+3+1JYY987654321123456789:CU+123456:BX'`

SEGMENT DETAILS

SG10 Status: M MaxRep: 9999 **Inner packaging identification**

Packages included within 5J or 6J outer packaging sequence or a simplified loading unit.

SG11 Status: M MaxRep: 1 **Package information - Inner packaging**

SG13 Status: M MaxRep: 1 **Package identification**

SG14 Status: M MaxRep: 99 **Related Identification number**

Note: Serial number for the individual packages. The field must be repeated as many times as there are packages.

DTM Seq. No.: 31 Status: D MaxRep: 1 **Date/time/period**

	Name	St	Forma	Use / Remarks	Example
DTM					DTM
C507	Date/time/period	M			
2005	Date or time or period function code qualifier	M	an..3	**36 Expiry date**	+36
2380	Date or time or period text	M	n8	Date	:20230201
2379	Date or time or period format code	M	an..3	**102 CCYYMMDD**	:102'

Note: Segment is only to be used when the part number connected to the HU is a documentation article or has a cast number requirement and batch numbers is given in GIR+3 DE7402.

Regarding marking on the labels the following applies: If there is a latest date of usage for the shipped parts (DTM+36) it must be stated on the label with the prefix "U". If there is no latest date of usage, the goods despatch date (DTM+11) is to be stated on the label with the prefid "D". If there is no latest date of usage for the shipped goods or the despatch date is not known, the production date from can be stated on the label, prefixed by a "P". More info can be found in STD 4172-10.

Example: `DTM+36:20230201:102'`

SEGMENT DETAILS

SG10 Status: M MaxRep: 9999 **Inner packaging identification**

Packages included within 5J or 6J outer packaging sequence or a simplified loading unit.

SG11 Status: M MaxRep: 1 **Package information - Inner packaging**

SG13 Status: M MaxRep: 1 **Package identification**

SG15 Status: M MaxRep: 99 **Individual goods identity number**

GIN Seq. No.: 32 Status: D MaxRep: 1 **Goods identity number**

	Name	St	Forma	Use / Remarks	Example
GIN					**GIN**
7405	Object identification code qualifier	M	an..3	**BN Serial number**	**+BN**
C208	Identity number range	M			
7402	Object identifier	M	an..18		**+IdentityNumber'**

Note: Identity number for each individual article within the loading unit. Only to be used after agreement between the supplier and Scania.

Example: `GIN+BN+IdentityNumber'`

SEGMENT DETAILS

SG10 Status: M MaxRep: 9999 **Inner packaging identification**

Packages included within 5J or 6J outer packaging sequence or a simplified loading unit.

SG17 Status: M MaxRep: 1 **Despatched article information**

LIN Seq. No.: 33 Status: M MaxRep: 1 **Line item**

	Name	St	Forma	Use / Remarks	Example
LIN					**LIN**
1082	Line item identifier	N		not used	**+**
1229	Action code	N		not used	**+**
C212	Item number identification	M			
7140	Item identifier	M	n..18	Scania Article Number	**+2901097**
7143	Item type identification code	M	an2	**IN Buyer's item number**	**:IN'**

Note: Article required by the buyer, which is scheduled to be delivered. SG12 DE7140 (Scania Article Number) is to be stated on the part number field on the transport label.

Example: `LIN+++2901097:IN'`

SEGMENT DETAILS

SG10 Status: M MaxRep: 9999 **Inner packaging identification**

Packages included within 5J or 6J outer packaging sequence or a simplified loading unit.

SG17 Status: M MaxRep: 1 **Despatched article information**

PIA Seq. No.: 34 Status: M MaxRep: 1 **Additional product id**

	Name	St	Forma	Use / Remarks	Example
PIA					PIA
4347	Product identifier code qualifier	M	an..3		+1
				1 Additional identification	
C212	Item number identification	M			
7140	Item identifier	M	an..18	Additional identification (article number) for the article given in LIN+ segment	+123456789'

Note: If there is a PIA+ segment within the DELFOR sent for a Scania Part Number, then it shall be restated in SG17 PIA+segment within the DESADV and SG26 PIA+ within the INVOIC. If there is no value given in the PIA+ segment within the received DELFOR, then the Supplier is to give their own material number in this segment.

Example: `PIA+1+123456789'`

SEGMENT DETAILS

SG10 Status: M MaxRep: 9999 **Inner packaging identification**

Packages included within 5J or 6J outer packaging sequence or a simplified loading unit.

SG17 Status: M MaxRep: 1 **Despatched article information**

QTY Seq. No.: 35 Status: M MaxRep: 1 **Quantity**

	Name	St	Forma	Use / Remarks	Example
QTY					QTY
C186	Quantity details	M			
6063	Quantity type code qualifier	M	an..3	**12 Despatch quantity**	+12
6060	Quantity	M	n..13	Despatched quantity sum	:2250
6411	Measurement unit code	M	an3	Unit of measurement. Use the unit of measurement given in the latest DELFOR for the article **C62 one** **PCE Pieces**	:C62'

Example: `QTY+12:2250:C62'`

SEGMENT DETAILS

SG10 Status: M MaxRep: 9999 **Inner packaging identification**

Packages included within 5J or 6J outer packaging sequence or a simplified loading unit.

SG17 Status: M MaxRep: 1 **Despatched article information**

ALI Seq. No.: 36 Status: M MaxRep: 1 **Additional information**

	Name	St	Forma	Use / Remarks	Example
ALI					**ALI**
3239	Country of origin identifier	M	an2	Country of origin code ISO 3166-1 - Alpha 2 Code	**+SE'**

Note: Country of which the goods have been produced or manufactured.

Example: **ALI+SE'**

SEGMENT DETAILS

SG10 Status: M MaxRep: 9999 **Inner packaging identification**

Packages included within 5J or 6J outer packaging sequence or a simplified loading unit.

SG17 Status: M MaxRep: 1 **Despatched article information**

SG18 Status: M MaxRep: 1 **Scheduling agreement number**

RFF Seq. No.: 37 Status: M MaxRep: 1 **Reference**

	Name	St	Forma	Use / Remarks	Example
RFF					RFF
C506	Reference	M			
1153	Reference code qualifier	M	an..3	AJS Agreement number	+AJS
1154	Reference identifier	M	n..15	Scania Scheduling Agreement Number and line item, first 10 digits refers to the scheduling agreement number and the last 5 digits refers to the line item (position) on the Scheduling Agreement Number. Collected from the most recent DELFOR D04A RFF+AJS DE 1154. **Or the purchase order number**	:123456789800001'

Note: RFF+AJS = Scheduling agreement number, to be taken from the latest DELFOR D04A RFF+AJS for the article. To be transferred to INVOIC RFF+AJS.

The Scania ERP system consists of scheduling agreements (first 10 digits in the segment) connected to each supplier and PRU. Within each scheduling agreement there are separate articles (Scania Part Numbers) that are identified with a position/line item (last 5 digits in the segment) on the scheduling agreement. The values are to be taken from the latest DELFOR RFF+AJS sent for the Scania Part Number and to be restated in the DESADV and INVOIC RFF+AJS.

Example: `RFF+AJS:123456789800001'`

Scheduling agreement | Line item

EDI Translator Example: `RFF+AJS:0234567'`

Note: Using Scanias EDI translator the RFF+AJS segemnt will contain the 7-digit purchase order number.

SEGMENT DETAILS

UNT

Seq. No.: 38
Status: M
MaxRep: 1

Message trailer

	Name	St	Forma	Use / Remarks	Example
UNT					UNT
0074	Number of segments in a message	M	n..10		+36
0062	Message reference number	M	an..14		+7654'

Example: `UNT+36+7654'`

SEGMENT DETAILS

UNZ

Seq. No.: 39
Status: M
MaxRep: 1

Interchange trailer

	Name	St	Forma	Use / Remarks	Example
UNZ					**UNZ**
0036	Interchange control count	M	n..6		**+1**
0020	Interchange control reference	M	an..14		**+13239'**

Example: `UNZ+1+13239'`

SEGMENT DETAILS

APPENDIX 1 - EXAMPLES OF PACKING SCENARIOS - SCANIA DESADV D07A

Packing Scenario 1 – Mixed Loading Unit:

Scenario: 3 different Scania Part Numbers packed in 3 separate boxes on one pallet.
When there are different Scania Part Numbers packed in separate boxes on the same pallet. The rule is that one outer packaging sequence is required to identify the pallet (CPS+++3) and then each Scania Part Number shall have one separate CPS+++1 loop identifying each Scania Part Number and the connected handling unit IDs.

```
UNA:+.? '
UNB+UNOC:4+SENDERUNB123:OD:1234+094200005560840976PU0029:OD+221010:1501+13239'
UNH+7654+DESADV:D:07A:UN:GBSB11'
BGM+351+1234567898765432'
DTM+137:202210101501:203'
DTM+11:20221010:102'
MEA+AAX+AAD+GRM:55000'
NAD+BY+SEBA::92'
NAD+ST+BLC::92++SCANIA Battery LC+Verkstadsvägen by270+Södertälje++151 38+SE'
LOC+11+RD20::92'
NAD+SE+2000000::92++NAME+STREET AND STREET NUMBER+CITY++POSTAL CODE+SE'
NAD+MF+2000000::92++NAME+STREET AND STREET NUMBER+CITY++POSTAL CODE+SE'
NAD+SF+2000000::92++NAME+STREET AND STREET NUMBER+CITY++POSTAL CODE+SE'
CPS+1++3' → Outer Packaging Sequence Start
PAC+1+:35+::92' → Amount of pallets (1)
QTY+189:3:C62' → Amount of boxes on the pallet (3)
PCI+17+++5J::5' → Indication of the type of pallet (5J = mix pallet)
GIN+CU+5JUN987654321000000960' → Handling Unit ID of the pallet
GIN+AW+1JUN987654321000000961+1JUN987654321000000962+1JUN987654321000000963'→Handling Unit ID of the boxes on the pallet
CPS+2++1' → Inner packaging sequence start. "2" indicates that it is the second loop and "1" that it is inner packaging.
PAC+1+:35+::92' → Amount of boxes with below PN
MEA+AAY+G+GRM:7000'→Inner loading container gross weight
QTY+52:10:C62'→ Quantity per packaging
PCI+17+++1J::5' → "1J" indicates that is is a simplified loading unit (same Scania Part Number in the box)
GIR+3+1JUN987654321000000961:CU' → Handling Unit number for the inner packaging
LIN+++2001662:IN'→ Scania Part Number packed in the inner packaging
QTY+12:10:C62' →Total Qty sent of the Scania Part Number
ALI+SE'→ Country of origin for the Scania Part Number
RFF+AJS:123456789800001'→ Scania Scheduling Agreement Number
CPS+3++1' → Inner packaging sequence start. "3" indicates that it is the third loop and "1" that it is inner packaging.
PAC+1+:35+::92' → Amount of boxes with below PN
MEA+AAY+G+GRM:7000'→Inner loading container gross weight
QTY+52:10:C62'→ Quantity per packaging
PCI+17+++1J::5'→ "1J" indicates that is is a simplified loading unit (same Scania Part Number in the box)
GIR+3+1JUN987654321000000962:CU'→ Handling Unit number for the inner packaging
LIN+++2629777:IN'→ Scania Part Number packed in the inner packaging
QTY+12:10:C62'→Total Qty sent of the Scania Part Number
ALI+SE'→ Country of origin for the Scania Part Number
RFF+AJS:123456789800002'→ Scania Scheduling Agreement Number
CPS+4++1' → Inner packaging sequence start. "4" indicates that it is the fourth loop and "1" that it is inner packaging.
PAC+1+:35+::92' → Amount of boxes with below PN
MEA+AAY+G+GRM:7000'→Inner loading container gross weight
QTY+52:10:C62'→ Quantity per packaging
PCI+17+++1J::5'→ "1J" indicates that is is a simplified loading unit (same Scania Part Number in the box)
GIR+3+1JUN987654321000000962:CU'→ Handling Unit number for the inner packaging
LIN+++2629778:IN'→ Scania Part Number packed in the inner packaging
QTY+12:10:C62'→Total Qty sent of the Scania Part Number
ALI+SE'→ Country of origin for the Scania Part Number
RFF+AJS:123456789800001'→ Scania Scheduling Agreement Number
UNT+48+7654'
UNZ+1+13239'
```

1. Outer packaging
2. Inner packaging
3. Inner packaging
4. Inner packaging

SEGMENT DETAILS

Packing Scenario 2 – Mixed Loading Unit:

Scenario: 3 different Scania Part Numbers packed in multiple separate boxes on one pallet, the amount of boxes per Scania Part Number differs.

When there are different Scania Part Numbers packed in separate boxes on the same pallet, but with different amount of boxes per Scania Part Number. The rule is that one outer packaging sequence is required to identify the pallet (CPS+++3) and then each Scania Part Number shall have one separate CPS+++1 loop identifying each Scania Part Number. For each box containing the same Scania Part Number a following GIR+3 segment with the Handling Unit ID shall exist within the CPS+++1.

```
UNA:+.? '
UNB+UNOC:4+SENDERUNB123:OD:1234+094200005560840976PU0029:OD+221010:1501+13239'
UNH+7654+DESADV:D:07A:UN:GBSB11'
BGM+351+1234567898765432'
DTM+137:202210101501:203'
DTM+11:20221010:102'
MEA+AAX+AAD+GRM:55000'
NAD+BY+SEBA::92'
NAD+ST+BLC::92++SCANIA Battery LC+Verkstadsvägen by270+Södertälje++151 38+SE'
LOC+11+RD20::92'
NAD+SE+2000000::92++NAME+STREET AND STREET NUMBER+CITY++POSTAL CODE+SE'
NAD+MF+2000000::92++NAME+STREET AND STREET NUMBER+CITY++POSTAL CODE+SE'
NAD+SF+2000000::92++NAME+STREET AND STREET NUMBER+CITY++POSTAL CODE+SE'
CPS+1++3' → Outer Packaging Sequence Start
PAC+1+:35+::92' → Amount of pallets (1)
QTY+189:5:C62' → Amount of boxes on the pallet (5)
PCI+17+++5J::5' → Indication of the type of pallet (5J = mix pallet)
GIN+CU+5JUN987654321000000960' → Handling Unit ID of the pallet
GIN+AW+1JUN987654321000000961+1JUN987654321000000962+1JUN987654321000000963+1JUN987654321000000964+1JUN987654321000000965'→
Handling Unit ID of the boxes on the pallet
CPS+2++1' → Inner packaging sequence start. "2" indicates that it is the second loop and "1" that it is inner packaging.
PAC+2+:35+::92' → Amount of boxes with below PN (2)
MEA+AAY+G+GRM:7000'→Inner loading container gross weight
QTY+52:10:C62'→ Quantity per packaging
PCI+17+++1J::5' → "1J" indicates that is is a simplified loading unit (same Scania Part Number in the box)
GIR+3+1JUN987654321000000961:CU' → Handling Unit number for the inner packaging nr 1
GIR+3+1JUN987654321000000962:CU' → Handling Unit number for the inner packaging nr 2
LIN+++2001662:IN'→ Scania Part Number packed in the inner packaging
QTY+12:20:C62' →Total Qty sent of the Scania Part Number
ALI+SE'→ Country of origin for the Scania Part Number
RFF+AJS:123456789800001'→ Scania Scheduling Agreement Number
CPS+3++1' → Inner packaging sequence start. "3" indicates that it is the third loop and "1" that it is inner packaging.
PAC+1+:35+::92' → Amount of boxes with below PN
MEA+AAY+G+GRM:7000'→Inner loading container gross weight
QTY+52:10:C62'→ Quantity per packaging
PCI+17+++1J::5'→ "1J" indicates that is is a simplified loading unit (same Scania Part Number in the box)
GIR+3+1JUN987654321000000963:CU'→ Handling Unit number for the inner packaging
LIN+++2629777:IN'→ Scania Part Number packed in the inner packaging
QTY+12:10:C62'→Total Qty sent of the Scania Part Number
ALI+SE'→ Country of origin for the Scania Part Number
RFF+AJS:123456789800002'→ Scania Scheduling Agreement Number
CPS+4++1' → Inner packaging sequence start. "4" indicates that it is the fourth loop and "1" that it is inner packaging.
PAC+2+:35+::92' → Amount of boxes with below PN
MEA+AAY+G+GRM:7000'→Inner loading container gross weight
QTY+52:10:C62'→ Quantity per packaging
PCI+17+++1J::5'→ "1J" indicates that is is a simplified loading unit (same Scania Part Number in the box)
GIR+3+1JUN987654321000000964:CU'→ Handling Unit number for the inner packaging nr 1
GIR+3+1JUN987654321000000965:CU'→ Handling Unit number for the inner packaging nr 2
LIN+++2629778:IN'→ Scania Part Number packed in the inner packaging
QTY+12:20:C62'→Total Qty sent of the Scania Part Number
ALI+SE'→ Country of origin for the Scania Part Number
RFF+AJS:123456789800003'→ Scania Scheduling Agreement Number
UNT+50+7654'
UNZ+1+13239'
```

1. Outer packaging
2. Inner packaging
3. Inner packaging
4. Inner packaging

SEGMENT DETAILS

Packing Scenario 3 – Simplified Loading Unit:

Scenario: 4 identical pallets with the same Scania Part Number and **the same quantity per pallet (no boxes).**

When there are several pallets (without boxes) containing the same Scania Part Number and amount per pallet. The rule is that whenever there is only one packaging level within the loading unit it shall be treated as a simplified loading unit (1J). The simplified loading unit only requires the inner packaging sequence loop CPS+++1.

```
UNA:+.? '
UNB+UNOC:4+SENDERUNB123:OD:1234+09420000055608409 76PU0029:OD+221010:1501+13239'
UNH+7654+DESADV:D:07A:UN:GBSB11'
BGM+351+1234567898765432'
DTM+137:202210101501:203'
DTM+11:20221010:102'
MEA+AAX+AAD+GRM:55000'
NAD+BY+SEBA::92'
NAD+ST+BLC::92++SCANIA Battery LC+Verkstadsvägen by270+Södertälje++151 38+SE'
LOC+11+RD20::92'
NAD+SE+2000000::92++NAME+STREET AND STREET NUMBER+CITY++POSTAL CODE+SE'
NAD+MF+2000000::92++NAME+STREET AND STREET NUMBER+CITY++POSTAL CODE+SE'
NAD+SF+2000000::92++NAME+STREET AND STREET NUMBER+CITY++POSTAL CODE+SE'
CPS+1++1' → Inner packaging sequence start. "1" indicates that it is the first loop and "1" that it is an inner/simpl. loading unit.
PAC+4+:35+::92' → Amount of simplified loading units with below PN (5)
MEA+AAY+G+GRM:50000'→Simplified loading unit gross weight
QTY+52:4:C62'→ Quantity per simplified loading unit
PCI+17+++1J::5' → "1J" indicates that is is a simplified loading unit (same Scania Part Number per loading unit)
GIR+3+1JUN987654321000000961:CU' → Handling Unit number for the inner packaging nr 1
GIR+3+1JUN987654321000000962:CU' → Handling Unit number for the inner packaging nr 2
GIR+3+1JUN987654321000000963:CU' → Handling Unit number for the inner packaging nr 3
GIR+3+1JUN987654321000000964:CU' → Handling Unit number for the inner packaging nr 4
LIN+++1852482:IN'→ Scania Part Number packed in the simplified loading unit
QTY+12:16:C62' →Total Qty sent of the Scania Part Number
ALI+SE'→ Country of origin for the Scania Part Number
RFF+AJS:123456789800001'→ Scania Scheduling Agreement Number
UNT+25+7654'
UNZ+1+13239'
```

1. Inner packaging

SEGMENT DETAILS

Packing Scenario 4 – Simplified Loading Unit

Scenario: Two pallets loaded with same Scania Part Number (no boxes) and **different amounts per pallet.**

When there are several pallets containing the same Scania Part Number but with different amounts per pallet or different amount of boxes per pallet. The rule is that the pallets shall be treated as separate loading units, with separate CPS-loops.

Example

```
UNA:+.? '
UNB+UNOC:4+SENDERUNB123:OD:1234+094200005560840976PU0029:OD+221010:1501+13239'
UNH+7654+DESADV:D:07A:UN:GBSB11'
BGM+351+1234567898765432'
DTM+137:202210101501:203'
DTM+11:20221010:102'
MEA+AAX+AAD+GRM:55000'
NAD+BY+SEBA::92'
NAD+ST+BLC::92++SCANIA Battery LC+Verkstadsvägen by270+Södertälje++151 38+SE'
LOC+11+RD20::92'
NAD+SE+2000000::92++NAME+STREET AND STREET NUMBER+CITY++POSTAL CODE+SE'
NAD+MF+2000000::92++NAME+STREET AND STREET NUMBER+CITY++POSTAL CODE+SE'
NAD+SF+2000000::92++NAME+STREET AND STREET NUMBER+CITY++POSTAL CODE+SE'
CPS+1++1' → Inner packaging sequence start. First ”1” indicates that it is the first loop and second “1” that it is an inner/simpl. loading unit.
PAC+1+:35+::92' → Amount of simplified loading units with below PN (1)
MEA+AAY+G+GRM:50000'→Simplified loading unit gross weight
QTY+52:5:C62'→ Quantity per simplified loading unit
PCI+17+++1J::5' → “1J” indicates that is is a simplified loading unit (same Scania Part Number per loading unit)
GIR+3+1JUN98765432100000096l:CU' → Handling Unit number for the inner packaging
LIN+++1781866:IN'→ Scania Part Number packed in the simplified loading unit
QTY+12:5:C62' →Total Qty sent of the Scania Part Number
ALI+SE'→ Country of origin for the Scania Part Number
RFF+AJS:123456789800001'→ Scania Scheduling Agreement Number
CPS+2++1' → Inner packaging sequence start. ”2” indicates that it is the second loop and “1” that it is an inner/simpl. loading unit.
PAC+1+:35+::92' → Amount of simplified loading units with below PN (5)
MEA+AAY+G+GRM:50000'→Simplified loading unit gross weight
QTY+52:1:C62'→ Quantity per simplified loading unit
PCI+17+++1J::5' → “1J” indicates that is is a simplified loading unit (same Scania Part Number per loading unit)
GIR+3+1JUN98765432100000096l:CU' → Handling Unit number for the inner packaging
LIN+++1781866:IN'→ Scania Part Number packed in the simplified loading unit
QTY+12:1:C62' →Total Qty sent of the Scania Part Number
ALI+SE'→ Country of origin for the Scania Part Number
RFF+AJS:123456789800001'→ Scania Scheduling Agreement Number
UNT+32+7654'
UNZ+1+13239'
```

1. Inner packaging

2. Inner packaging

SEGMENT DETAILS

Packing Scenario 5 – Homogeneous Loading Unit

Scenario: Two pallets loaded with same Scania Part Number in boxes, **different amounts of boxes per pallet.**

Example:

```
UNA:+.? '
UNB+UNOC:4+SENDERUNB123:OD:1234+094200005560840976PU0029:OD+221010:1501+13239'
UNH+7654+DESADV:D:07A:UN:GBSB11'
BGM+351+1234567898765432'
DTM+137:202210101501:203'
DTM+11:20221010:102'
MEA+AAX+AAD+GRM:55000'
NAD+BY+SEBA::92'
NAD+ST+BLC::92++SCANIA Battery LC+Verkstadsvägen by270+Södertälje++151 38+SE'
LOC+11+RD20::92'
NAD+SE+2000000::92++NAME+STREET AND STREET NUMBER+CITY++POSTAL CODE+SE'
NAD+MF+2000000::92++NAME+STREET AND STREET NUMBER+CITY++POSTAL CODE+SE'
NAD+SF+2000000::92++NAME+STREET AND STREET NUMBER+CITY++POSTAL CODE+SE'
CPS+1++3' → Outer Packaging Sequence Start
PAC+1+:35+::92' → Amount of pallets (1)
QTY+189:3:C62' → Amount of boxes on the pallet (3)
PCI+17+++6J::5' → Indication of the type of pallet (6J = Homogeneous pallet)
GIN+CU+6JUN987654321000000960' → Handling Unit ID of the first pallet
GIN+AW+1JUN987654321000000961+1JUN987654321000000962+1JUN987654321000000963' →Handling Unit ID of the boxes on the pallet
CPS+2++1' → Inner packaging sequence start. "2" indicates that it is the second loop and "1" that it is inner packaging.
PAC+3+:35+::92' → Amount of boxes with below PN (3)
MEA+AAY+G+GRM:7000'→Inner loading container gross weight
QTY+52:10:C62'→ Quantity per packaging
PCI+17+++1J::5' → "1J" indicates that is is a simplified loading unit (same Scania Part Number in the box)
GIR+3+1JUN987654321000000961:CU' → Handling Unit number for the inner packaging nr 1
GIR+3+1JUN987654321000000962:CU' → Handling Unit number for the inner packaging nr 2
GIR+3+1JUN987654321000000963:CU' → Handling Unit number for the inner packaging nr 3
LIN+++2001662:IN'→ Scania Part Number packed in the inner packaging
QTY+12:30:C62' →Total Qty sent of the Scania Part Number
ALI+SE'→ Country of origin for the Scania Part Number
RFF+AJS:123456789800001'→ Scania Scheduling Agreement Number
CPS+3++3' → Outer Packaging Sequence Start
PAC+1+:35+::92' → Amount of pallets (1)
QTY+189:2:C62' → Amount of boxes on the pallet (2)
PCI+17+++6J::5' → Indication of the type of pallet (6J = Homogeneous pallet)
GIN+CU+6JUN987654321000000964' → Handling Unit ID of the second pallet
GIN+AW+1JUN987654321000000965+1JUN987654321000000966' →Handling Unit ID of the boxes on the pallet
CPS+4++1' → Inner packaging sequence start. "4" indicates that it is the fourth loop and  "1" that it is inner packaging.
PAC+2+:35+::92' → Amount of boxes with below PN
MEA+AAY+G+GRM:7000'→Inner loading container gross weight
QTY+52:10:C62'→ Quantity per packaging
PCI+17+++1J::5'→ "1J" indicates that is is a simplified loading unit (same Scania Part Number in the box)
GIR+3+1JUN987654321000000965:CU'→ Handling Unit number for the inner packaging
GIR+3+1JUN987654321000000966:CU'→ Handling Unit number for the inner packaging
LIN+++2001662:IN'→ Scania Part Number packed in the inner packaging
QTY+12:20:C62'→Total Qty sent of the Scania Part Number
ALI+SE'→ Country of origin for the Scania Part Number
RFF+AJS:123456789800001'→ Scania Scheduling Agreement Number
UNT+47+7654'
UNZ+1+13239'
```

1. Outer packaging

2. Inner packaging

1. Outer packaging

2. Inner packaging

SEGMENT DETAILS

Packing Scenario 6 – Homogeneous loading unit:

Scenario: Pallets with same amount of boxes containing the same Scania Part Number.

When there are several pallets containing the same Scania Part Number and the same amount of boxes per pallet, the pallets are to be treated as homogeneous loading units (6J) with an outer packaging sequence (CPS+++3) and an inner packaging sequence (CPS+++1). There are two alternatives how to group the loading units, either each pallet has one outer and inner CPS-loop each (example 1) or the pallets and inner loading containers are grouped under one outer and one inner CPS-loop (example 2).

Example 1:

```
UNA:+.? '
UNB+UNOC:4+SENDERUNB123:OD:1234+094200005560840976PU0029:OD+221010:1501+13239'
UNH+7654+DESADV:D:07A:UN:GBSB11'
BGM+351+1234567898765432'
DTM+137:202210101501:203'
DTM+11:20221010:102'
MEA+AAX+AAD+GRM:55000'
NAD+BY+SEBA::92'
NAD+ST+BLC::92++SCANIA Battery LC+Verkstadsvägen by270+Södertälje++151 38+SE'
LOC+11+RD20::92'
NAD+SE+0002000000::92++NAME+STREET AND STREET NUMBER+CITY++POSTAL CODE+SE'
NAD+MF+0002000000::92++NAME+STREET AND STREET NUMBER+CITY++POSTAL CODE+SE'
NAD+SF+0002000000::92++NAME+STREET AND STREET NUMBER+CITY++POSTAL CODE+SE'
CPS+1++3' → Outer Packaging Sequence Start
PAC+1' → Amount of pallets (1)
QTY+189:2:C62' → Amount of boxes on the pallet (2)
PCI+17+++6J::5' → Indication of the type of pallet (6J = Homogeneous pallet)
GIN+CU+6JUN987654321000000960' → Handling Unit ID of the pallet
GIN+AW+1JUN987654321000000961+1JUN987654321000000962' →Handling Unit ID of the boxes on the pallet
CPS+2++1' → Inner packaging sequence start. "2" indicates that it is the second loop and "1" that it is inner packaging.
PAC+2' → Amount of boxes with below PN (2)
MEA+AAY+G+GRM:7000'→Inner loading container gross weight
QTY+52:10:C62'→ Quantity per packaging
PCI+17+++1J::5' → "1J" indicates that is is a simplified loading unit (same Scania Part Number in the box)
GIR+3+1JUN987654321000000961:CU' → Handling Unit number for the inner packaging nr 1
GIR+3+1JUN987654321000000962:CU' → Handling Unit number for the inner packaging nr 2
LIN+++00000000002001662:IN'→ Scania Part Number packed in the inner packaging
QTY+12:20:C62' →Total Qty sent of the Scania Part Number
ALI+SE'→ Country of origin for the Scania Part Number
RFF+AJS:123456789800001'→ Scania Scheduling Agreement Number
CPS+3++3' → Outer Packaging Sequence Start
PAC+1' → Amount of pallets (1)
QTY+189:2:C62' → Amount of boxes on the pallet (2)
PCI+17+++6J::5' → Indication of the type of pallet (6J = Homogeneous pallet)
GIN+CU+6JUN987654321000000964' → Handling Unit ID of the pallet
GIN+AW+1JUN987654321000000965+1JUN987654321000000966' →Handling Unit ID of the boxes on the pallet
CPS+4++1' → Inner packaging sequence start. "4" indicates that it is the fourth loop and "1" that it is inner packaging.
PAC+2' → Amount of boxes with below PN
MEA+AAY+G+GRM:7000'→Inner loading container gross weight
QTY+52:10:C62'→ Quantity per packaging
PCI+17+++1J::5'→ "1J" indicates that is is a simplified loading unit (same Scania Part Number in the box)
GIR+3+1JUN987654321000000965:CU'→ Handling Unit number for the inner packaging
GIR+3+1JUN987654321000000966:CU'→ Handling Unit number for the inner packaging
LIN+++00000000002001662:IN'→ Scania Part Number packed in the inner packaging
QTY+12:20:C62'→Total Qty sent of the Scania Part Number
ALI+SE'→ Country of origin for the Scania Part Number
RFF+AJS:123456789800001'→ Scania Scheduling Agreement Number
UNT+46+7654'
UNZ+1+13239'
```

1. Outer packaging
2. Inner packaging
1. Outer packaging
2. Inner packaging

SEGMENT DETAILS

Example 2:

```
UNA:+.? '
UNB+UNOC:4+SENDERUNB123:OD:1234+09420000055608409 76PU0029:OD+221010:1501+13239'
UNH+7654+DESADV:D:07A:UN:GBSB11'
BGM+351+1234567898765432'
DTM+137:202210101501:203'
DTM+11:20221010:102'
MEA+AAX+AAD+GRM:55000'
NAD+BY+SEBA::92'
NAD+ST+BLC::92++Scania Battery LC+Verkstadsvägen by270+Södertälje++151 38+SE'
LOC+11+RD20::92'
NAD+SE+0002000000::92++NAME+STREET AND STREET NUMBER+CITY++POSTAL CODE+SE'
NAD+MF+0002000000::92++NAME+STREET AND STREET NUMBER+CITY++POSTAL CODE+SE'
NAD+SF+0002000000::92++NAME+STREET AND STREET NUMBER+CITY++POSTAL CODE+SE'
CPS+1++3' → Outer Packaging Sequence Start
PAC+2' → Amount of pallets (2)
QTY+189:4:C62' → Amount of boxes on the pallet (4)
PCI+17+++6J::5' → Indication of the type of pallet (6J = Homogeneous pallet)
GIN+CU+6JUN987654321000000960' → Handling Unit ID of the pallet 1
GIN+AW+1JUN987654321000000961+1JUN987654321000000962' →Handling Unit ID of the boxes on pallet 1
GIN+CU+6JUN987654321000000964' → Handling Unit ID of the pallet 2
GIN+AW+1JUN987654321000000965+1JUN987654321000000966' →Handling Unit ID of the boxes on pallet 2
CPS+2++1' → Inner packaging sequence start. "2" indicates that it is the second loop and "1" that it is inner packaging.
PAC+4' → Amount of boxes with below PN (2)
MEA+AAY+G+GRM:7000'→Inner loading container gross weight
QTY+52:10:C62'→ Quantity per packaging
PCI+17+++1J::5' → "1J" indicates that is is a simplified loading unit (same Scania Part Number in the box)
GIR+3+1JUN987654321000000961:CU' → Handling Unit number for the inner packaging no 1
GIR+3+1JUN987654321000000962:CU' → Handling Unit number for the inner packaging no 2
GIR+3+1JUN987654321000000965:CU' → Handling Unit number for the inner packaging no 3
GIR+3+1JUN987654321000000966:CU' → Handling Unit number for the inner packaging no 4
LIN+++00000000002001662:IN'→ Scania Part Number packed in the inner packaging
QTY+12:40:C62' →Total Qty sent of the Scania Part Number
ALI+SE'→ Country of origin for the Scania Part Number
RFF+AJS:123456789800001'→ Scania Scheduling Agreement Number
UNT+46+7654'
UNZ+1+13239'
```

1. Outer packaging

2. Inner packaging

SEGMENT DETAILS

EDI Translator DESADV– (Simplified Loading Unit):

The EDI Translator DESADV contains the 4 digit supplier ID in the NAD+ segments and the purchase order number in the RFF+AJS segment.

Scenario: identical pallets with the same Scania Part Number and **the same quantity per pallet (no boxes).**

When there are several pallets (without boxes) containing the same Scania Part Number and amount per pallet. The rule is that whenever there is only one packaging level within the loading unit it shall be treated as a simplified loading unit (1J). The simplified loading unit only requires the inner packaging sequence loop CPS+++1.

UNA:+.? '
UNB+UNOC:4+SENDERUNB123:OD:1234+094200005560840976PU0029:OD+221010:1501+13239'
UNH+7654+DESADV:D:07A:UN:GBSB11'
BGM+351+1234567898765432'
DTM+137:202210101501:203'
DTM+11:20221010:102'
MEA+AAX+AAD+GRM:55000'
NAD+BY+SEBA::92'
NAD+ST+BLC::92++SCANIA Battery LC+Verkstadsvägen by270+Södertälje++151 38+SE'
LOC+11+RD20::92'
NAD+SE+1234::92++NAME+STREET AND STREET NUMBER+CITY++POSTAL CODE+SE'
NAD+MF+1234::92++NAME+STREET AND STREET NUMBER+CITY++POSTAL CODE+SE'
NAD+SF+1234::92++NAME+STREET AND STREET NUMBER+CITY++POSTAL CODE+SE'
CPS+1++1' → Inner packaging sequence start. ”1” indicates that it is the first loop and “1” that it is an inner/simpl. loading unit.
PAC+4+:35+::92' → Amount of simplified loading units with below PN (5)
MEA+AAY+G+GRM:50000'→Simplified loading unit gross weight
QTY+52:4:C62'→ Quantity per simplified loading unit
PCI+17+++1J::5' → “1J” indicates that is is a simplified loading unit (same Scania Part Number per loading unit)
GIR+3+1JUN987654321000000961:CU' → Handling Unit number for the inner packaging nr 1
GIR+3+1JUN987654321000000962:CU' → Handling Unit number for the inner packaging nr 2
GIR+3+1JUN987654321000000963:CU' → Handling Unit number for the inner packaging nr 3
GIR+3+1JUN987654321000000964:CU' → Handling Unit number for the inner packaging nr 4
LIN+++1852482:IN'→ Scania Part Number packed in the simplified loading unit
QTY+12:16:C62' →Total Qty sent of the Scania Part Number
ALI+SE'→ Country of origin for the Scania Part Number
RFF+AJS:1234567→ Scania purchase order number
UNT+25+7654'
UNZ+1+13239'

1. Inner packaging